| 적용 도면 (Applied DRAW. No.) | | |
|---|---|---|
| | 도면 번호 (DRAW. No.) | 비 고 (Remarks) |
| 1 | | |
| 2 | | |

| MARK | DATE | DETAIL OF REVISION | CHECK | APP. |
|---|---|---|---|---|
| △ | | | | |
| △ | | | | |

# SOHP-155S(N)

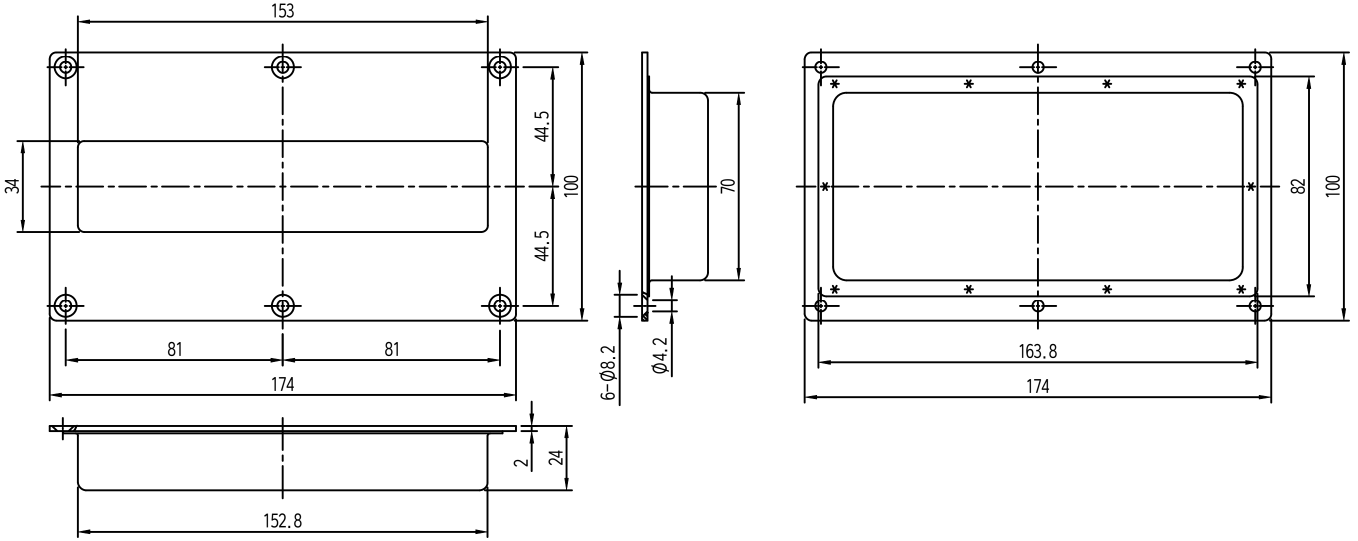
153
44.5
44.5
34
100
81
81
174
70
6-Ø8.2
Ø4.2
82
100
163.8
174
2
24
152.8

주기
1. 샘플승인득한후양산할것.
2. 제품조립시작업자가상해를입지않도록날카로운부위를제거한다.
3. 지시하지않은R은자연R로한다.
4. 기타자세한사항은설계자와협의한다.

GENERAL TOLERANCE

| DIVISION / GRADE | A LEVEL | B LEVEL | C LEVEL |
|---|---|---|---|
| 1-4 | ~~±0.05~~ | ±0.10 | ~~±0.25~~ |
| 4-6 | ~~±0.07~~ | ±0.20 | ~~±0.35~~ |
| 16-63 | ~~±0.10~~ | ±0.30 | ~~±0.50~~ |
| 63-250 | ~~±0.18~~ | ±0.55 | ~~±0.90~~ |
| 250-500 | ~~±0.30~~ | ±0.90 | ~~±1.50~~ |
| 500-1000 | ~~±0.50~~ | ±1.50 | ~~±2.50~~ |

| 부 품 번<br>Part No. | 번호<br>No. | 명 칭<br>Part Name | 갯수<br>Qt'y | 재 질<br>Material | 비 고<br>Remarks |
|---|---|---|---|---|---|

| DRAWN | CHECKED | CHECKED | APPROVED | SCALE : 1/1 | MODEL: |
|---|---|---|---|---|---|
| | | | | UNIT: MM | TITLE: |
| SAMO | | | | SIZE: THIRD ANGLE PROJECTION | MODEL No. |
| | | | | DATE : | DWG No. |