적용 도면 (Applied DRAW. No.)		
	도면 번호 (DRAW. No.)	비 고 (Remarks)
1		
2		

MARK	DATE	DETAIL OF REVISION	CHECK	APP.
△				
△				

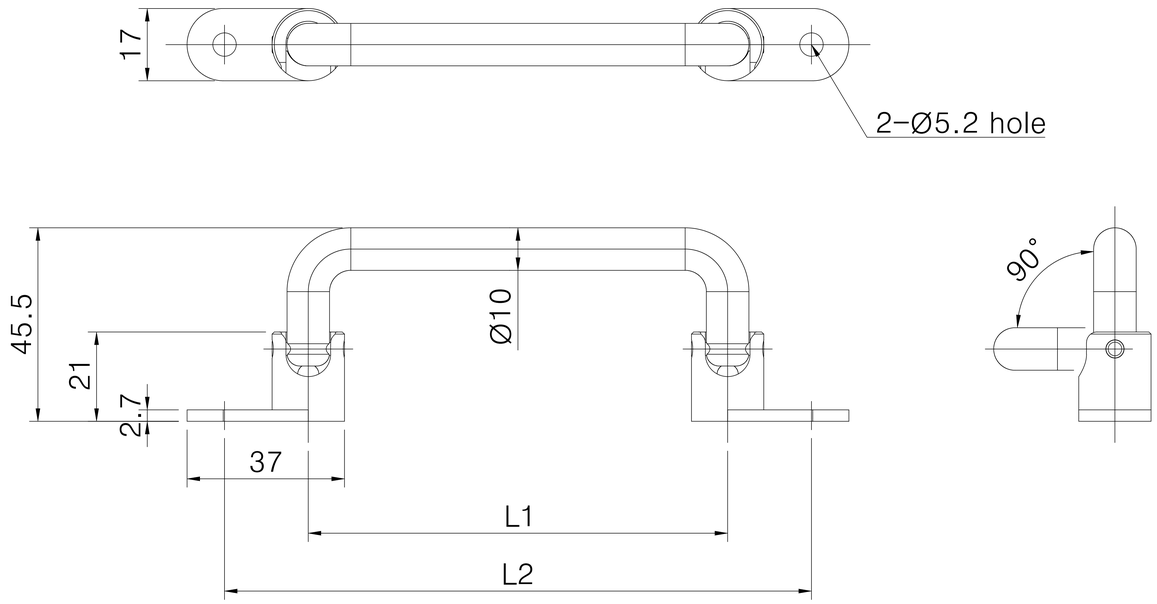

	L1	L2
SJBCS-10138	98.6	138
SJBCS-10158	118.6	158
SJBCS-10180	140.6	180
SJBCS-10218	178.6	218

□ □

1. □□ □□ □□□ □□□ □.
2. □□ □□□ □□□□ □□□ □□ □□□ □□□□ □□□ □□□□.
3. □□□□ □□ R□ □□R□ □□.
4. □□ □□□ □□□ □□□□ □□□□.

GENERAL TOLERANCE

DIVISION \ GRADE	A LEVEL	B LEVEL	C LEVEL
1-4	±0.05	±0.10	±0.25
4-6	±0.07	±0.20	±0.35
16-63	±0.10	±0.30	±0.50
63-250	±0.18	±0.55	±0.90
250-500	±0.30	±0.90	±1.50
500-1000	±0.50	±1.50	±2.50

부 품 번 Part No.	번호 No.	명 칭 Part Name	갯수 Qt'y	재 질	비 고 Remarks

DRAWN	CHECKED	CHECKED	APPROVED

SAMO

SCALE : 1/1
UNIT: MM
SIZE: A2
THIRD ANGLE PROJECTION
DATE :
MODEL:
TITLE:
MODEL No.
DWG No.